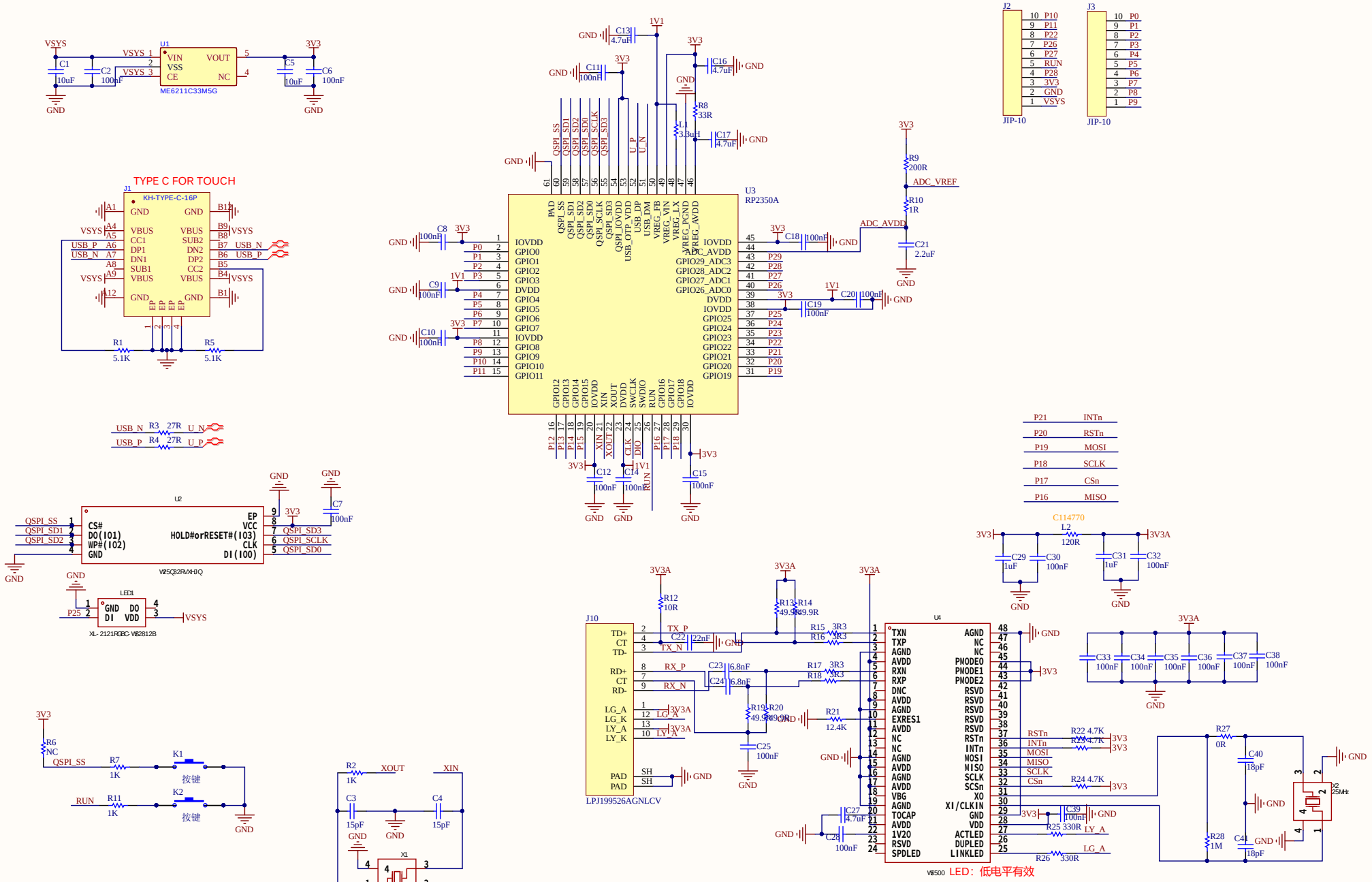

			TITLE: RP2350-MINI(ETH)	
			DRAWER: Andy Li	APPROVER: Andy Li
			REV: V1.0	DATE: 02/12/2024
Date	Rev	Change descriptions	Changer	Approver	SIZE: A4_portrait	SHEET: 1/1